Electrolux PROFESSIONAL

LiberoPro
Plug-in induction Griddle, stainless steel smooth plate

ITEM #

MODEL #

NAME #

SIS #

AIA #

600886 (E1IREEOMCS) Plug-in induction Griddle, stainless steel smooth plate

Short Form Specification

Item No.

Plug-in 1 Phase table top mono zone induction Griddle constructed with 4 sides unique frame in AISI 304 2 mm thick. Non-stick smooth cooking plate (11 mm thick) is a compound of aluminium and AISI 436 stainless steel, for oustanding cooking uniformity. Integrated splash guard and grease collection drawer with 0,5 lt capacity. Glass touch display on top for maximum visibility with temperature setting (60 - 280°C). 2-color user interface (white and red) for better readability. Lock function stops your settings to be accidentally modified during working. Hot surface warning to prevent injuries. Cleaning function to set directly the right cooking surface temperature to activate Electrolux Professional rapid grease detergent. 4 feet, cord and plug included. IPx4 water protection. Designed for LiberoPro Duo function for automatic regulation of the LiberPro Point fan speed according to cooking intensity.

APPROVAL:

Main Features

- Plug in unit designed for table top installations.
- 2-color user interface (white and red) for better readability.
- 11 mm cooking plate in 3 layers of :
  -AISI 436 stainless steel at the base
  -Aluminum in the center
  -AISI 436 on the surface
- Outstanding cooking eveness and fast recovery time.
- Energy efficiency guaranteed by induction technology.
- Non-stick cooking plate.
- Scraper, 4 feet, cord and plug included.
- Glass touch display on top for maximum visibility with temperature indication.
- Temperature set from 60 to 280 °C with possibility of fine tuning of + or - 1 °C.
- Cleaning function: set the right cooking surface temperature to activate Electrolux Professional C40 Rapid Grease detergent.
- Safety first. Visual message displayed when the hob is still hot to prevent injuries.
- Self-diagnostics: an error code is displayed (Exxx) in case of dysfunction.
- Designed for LiberoPro Duo function for automatic regulation of the LiberPro Point fan speed according to cooking intensity.

Construction

- 4 sides unique frame in AISI 304 2 mm thick.
- Integrated grease drain with drawer removable under the cooking surface.
- Grease collection drawer capacity 0,5 lt (for single zone model).
- Induction air filters easy to clean and remove for monthly cleaning.
- IPx4 water protection.

LiberoPro
Plug-in induction Griddle, stainless steel smooth plate

Top

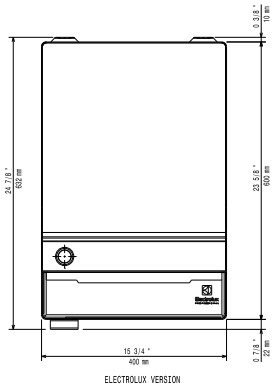

Side

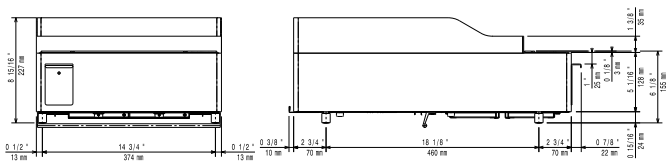

EI = Electrical inlet (power)
EO = Electrical Outlet

Other

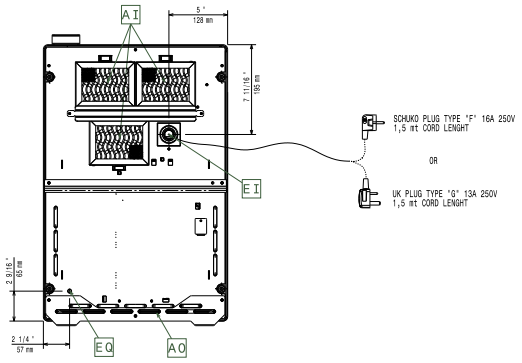

Electric

Supply voltage:	
600886 (E1IREEOMCS)	220-240 V/1N ph/50-60 Hz
Total Watts:	3.5 kW
Plug type:	CE-SCHUKO
Minimum Circuit Ampacity (MCA):	16A

Key Information:

Cooking surface size, (W/D):	390 / 410 mm
Working Temperature MIN:	60 °C
Working Temperature MAX:	280 °C
External dimensions, Width:	400 mm
External dimensions, Depth:	600 mm
External dimensions, Height:	227 mm
Net weight:	26 kg

The use of the provided grill scraper is recommended for cleaning operations.

The company reserves the right to make modifications to the products without prior notice. All information correct at time of printing.

2024.10.09